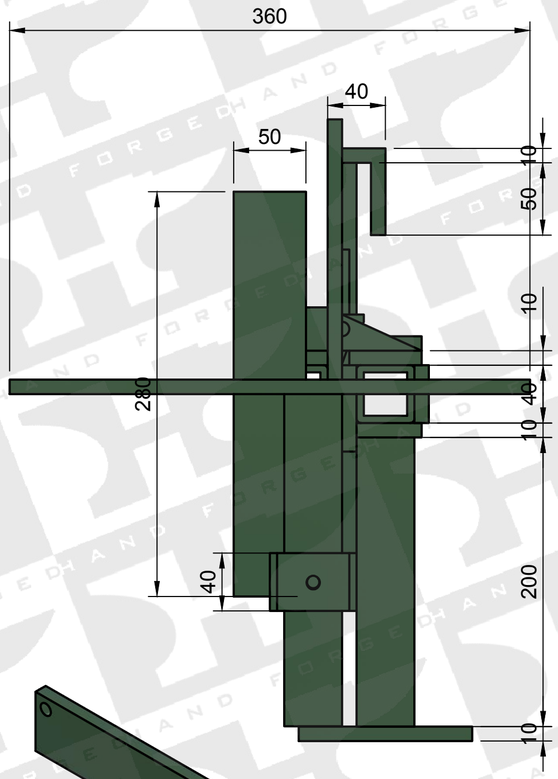

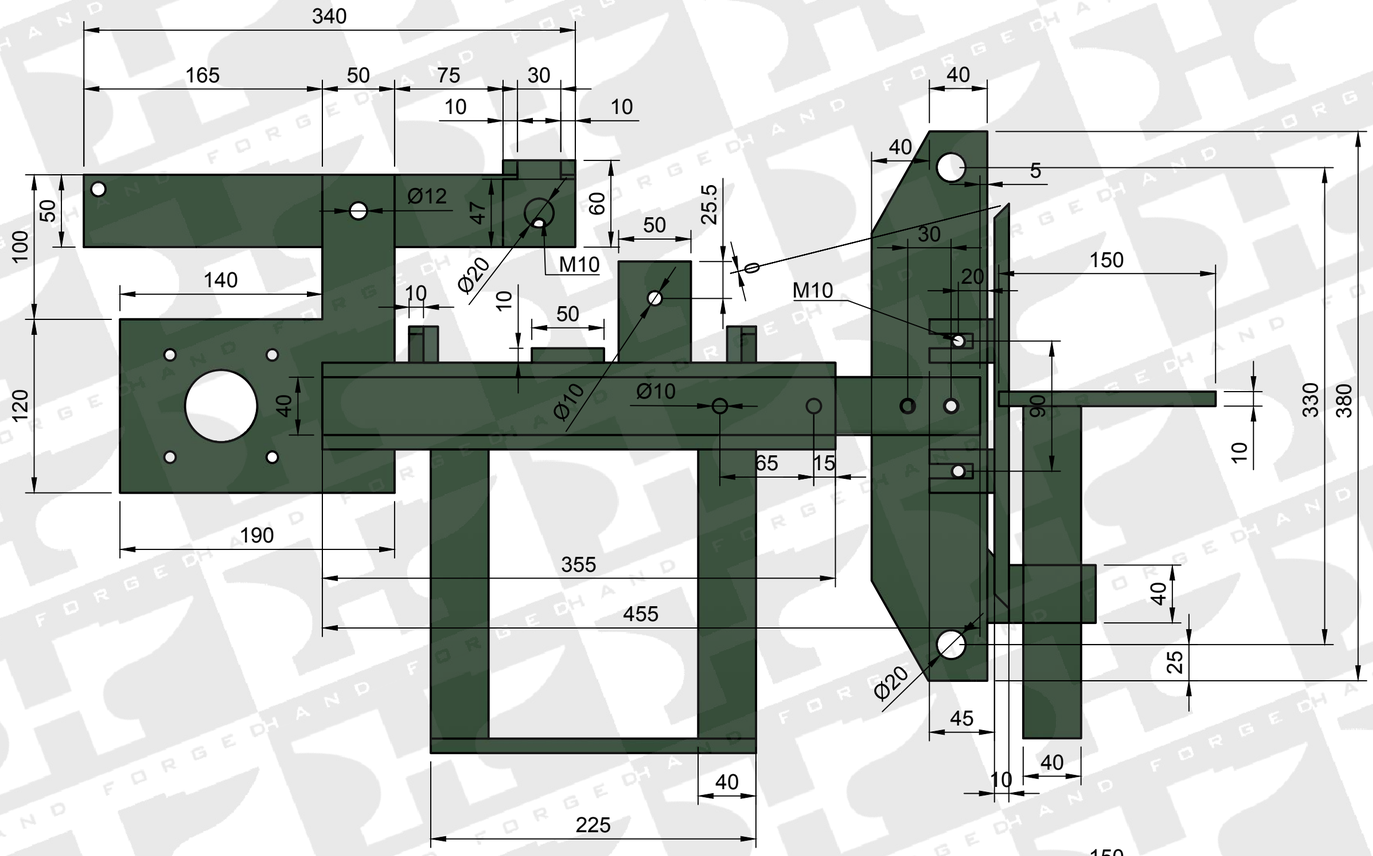

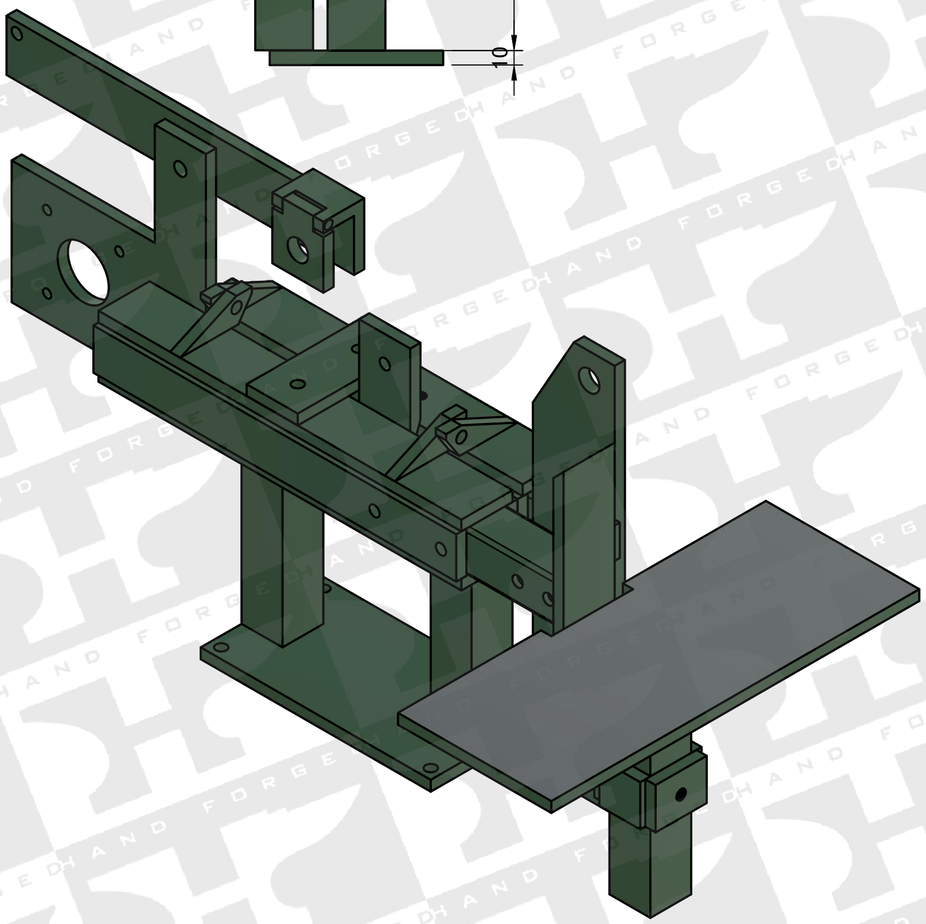

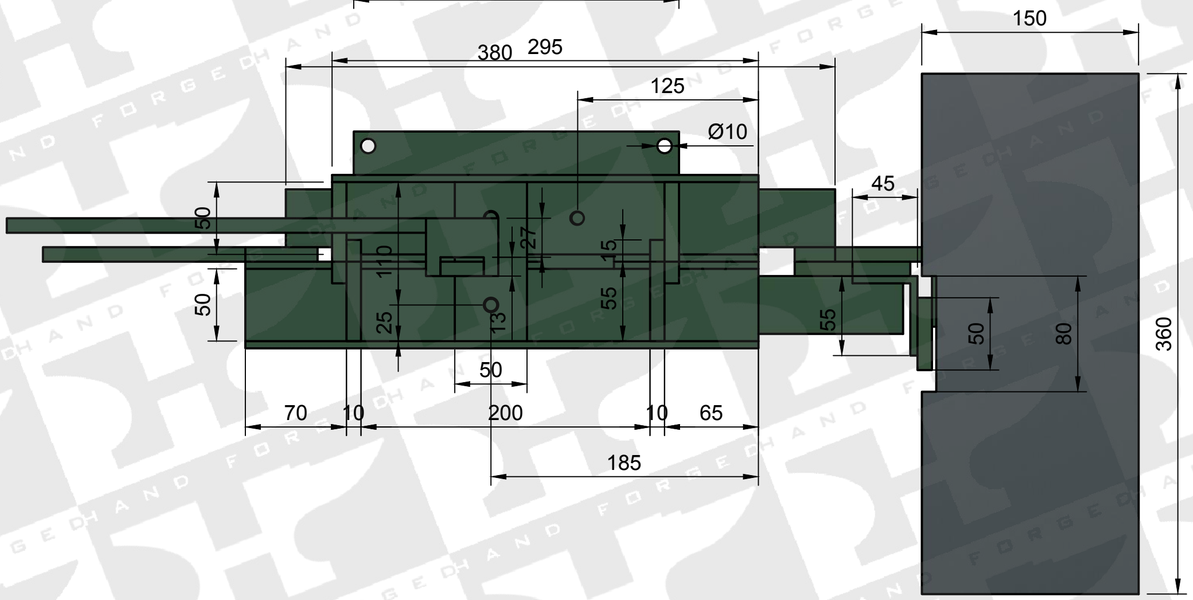

Designed by HAND FORGED 2020
Bandschleifer / Belt grinder
50x1800/2000mm

Version 2.0
info@hand-forged.de
instagram.com/handforged
Seite 2 von 3